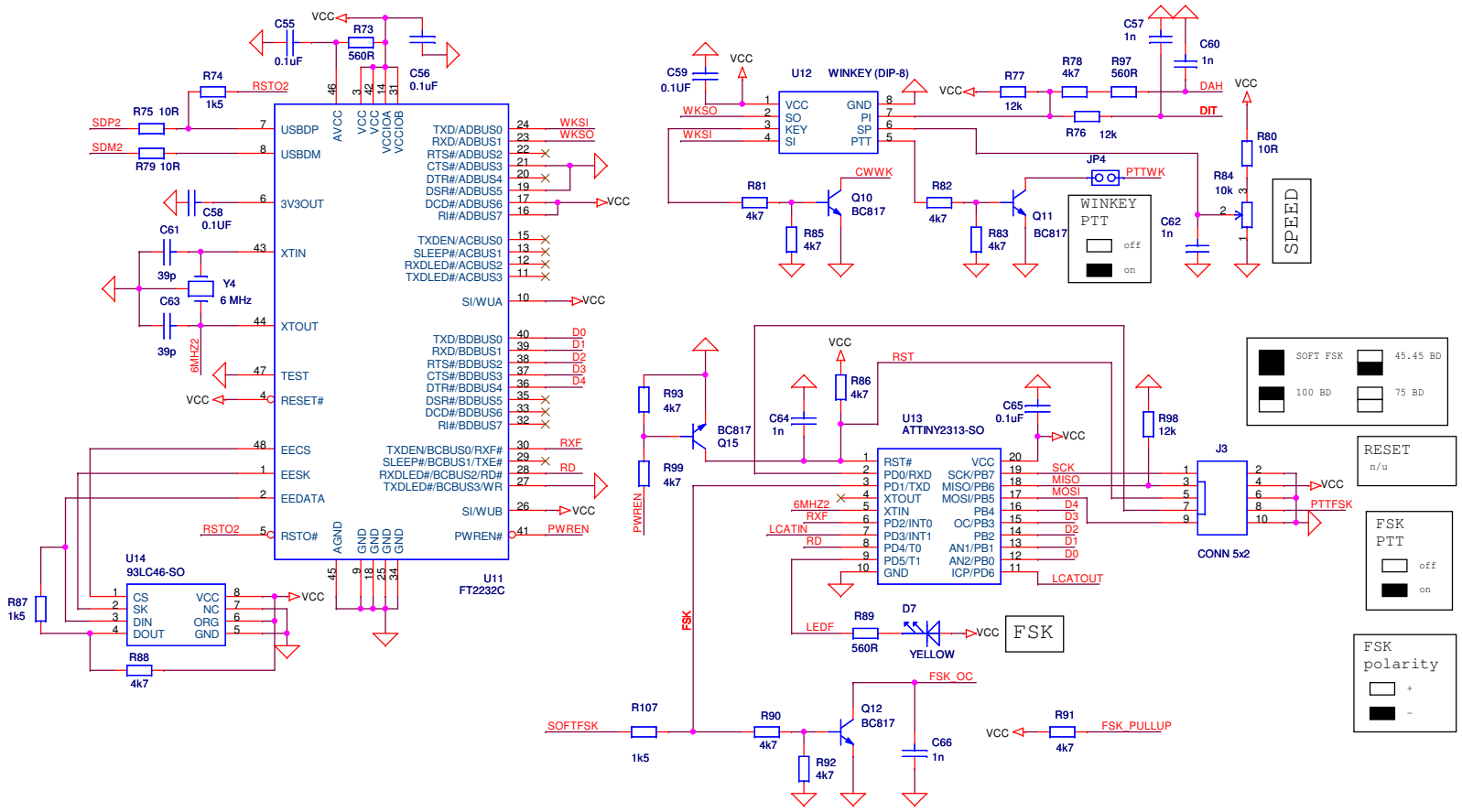

Rig Expert Ukraine Ltd.			
Title	RigExpert TI-5 ver. 1.1		
Size A3	Document Number REU.RETI511		Rev 1
Date: Wednesday, April 21, 2010	Sheet 4 of 4		